Dual Airfoil Testing Platform

WRIGHT STATE UNIVERSITY

Team Members:
Bryce Fox
Ayden Locke
Kyle Schultz
Sam Steck

Advisor:
Dr. Zifeng Yang

Course Instructor:
Dr. Craig M Baudendistel

Objective

The objective of this project is to improve the previous group's design. This was primarily done by decreasing the lose wires by implementing a Bluetooth connection and adding encoders to the motors to continuously read the position of the motors. This prevents motors from missing their target or becoming too out of sync.

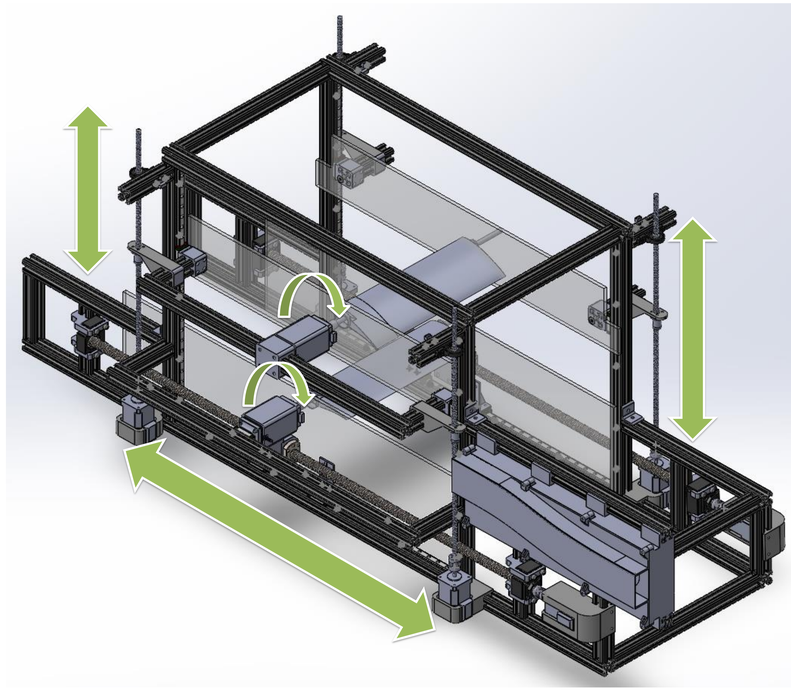

Why Dual Airfoils?

Dual airfoils can both increase lift and reduce the likelihood of stall. The flow characteristics caused by the airfoils is dependent on the airfoil positions. This creates the possibility for future aircraft to change airfoil positions during flight for optimal performance.

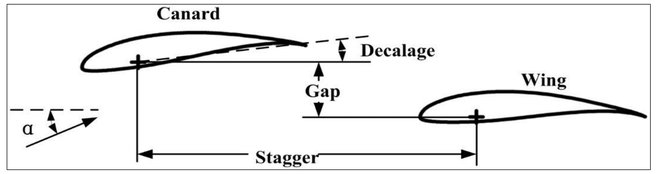

CFD Analysis

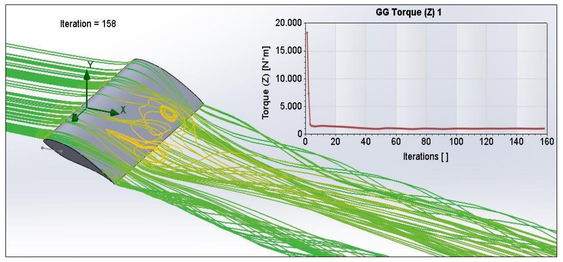

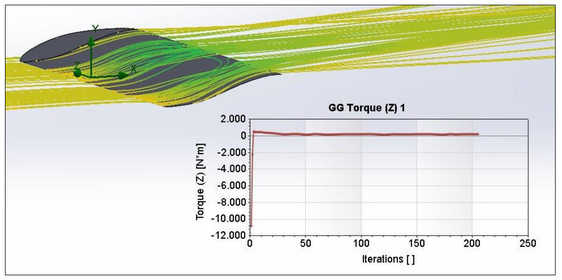

Flow Visualization

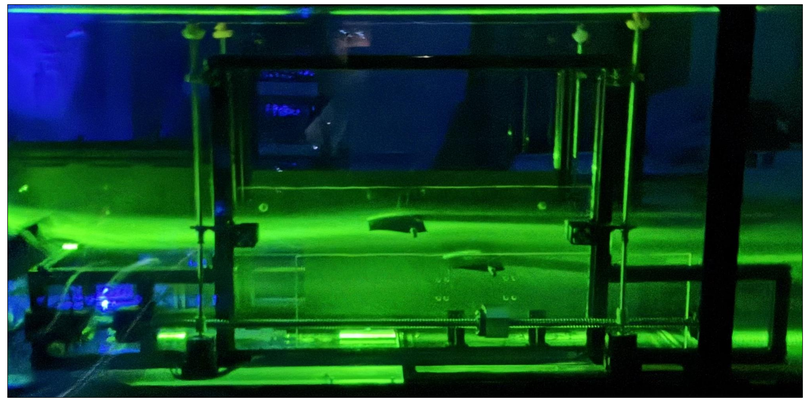

Web-Based Controller

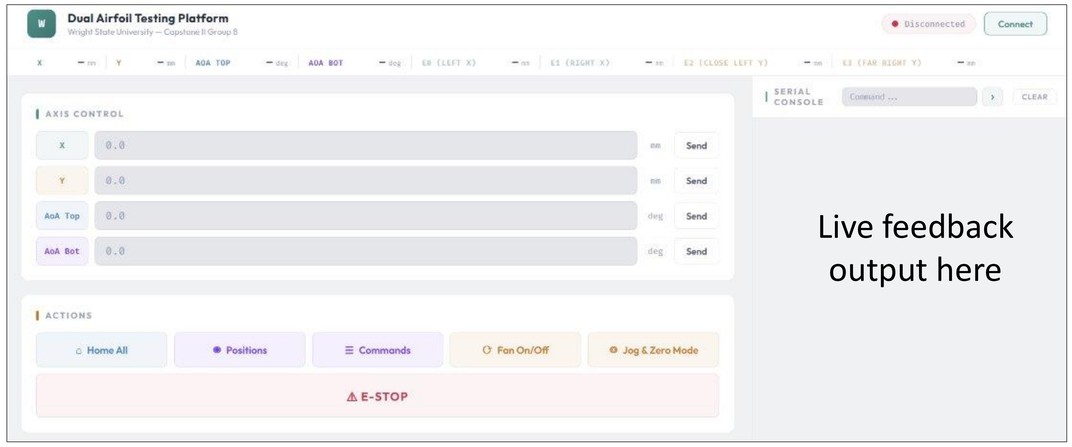

Live feedback output here

FEA

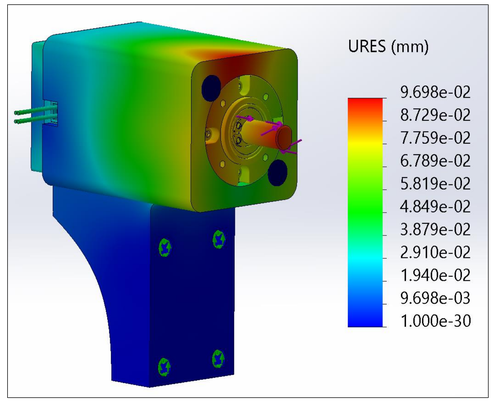

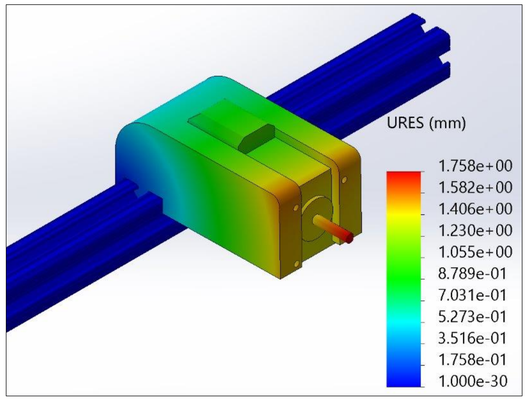

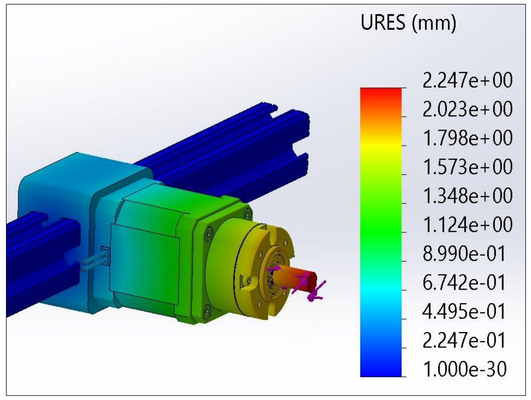

FEA was performed to confirm that our new motor mounts would not break or deform under the loading. A CFD analysis was also performed to verify the amount of torque the motors needed to withstand under wind tunnel testing.